HZHL-100A

HZHL-100A

. 4
. 4
. 4
. 4
. 5
. 6
. 6
. 7
. 7
. 8
. 8
. 9

3	DC 100A	
4	0.5% ± 1d	
5	LCD	
	LCD	
6	AC220V ± 10% 50Hz	
7	- 10 40	≤ 80 %RH
8	300 × 270 × 200 mm^3	
9	5Kg	

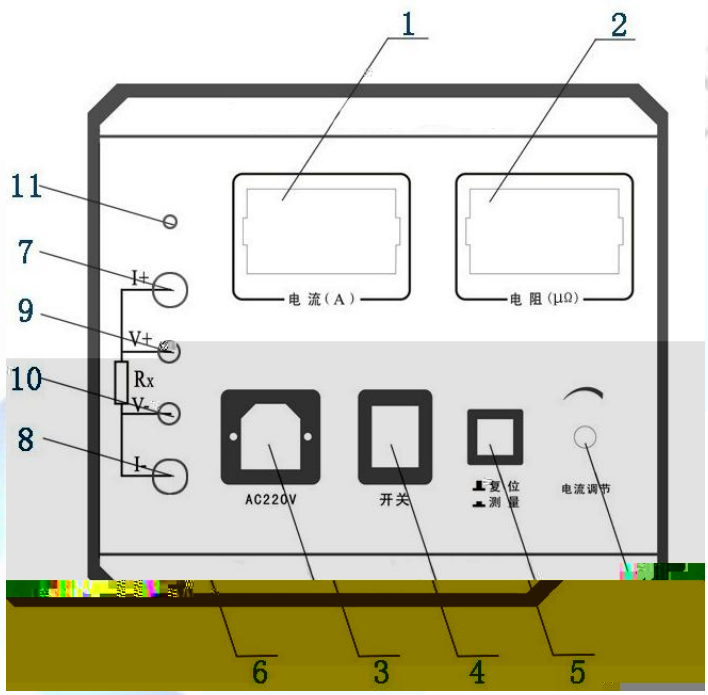

1	A	2	μ Ω	3	
4		5		6	
7	I	8	I	9	V
10	V	11			

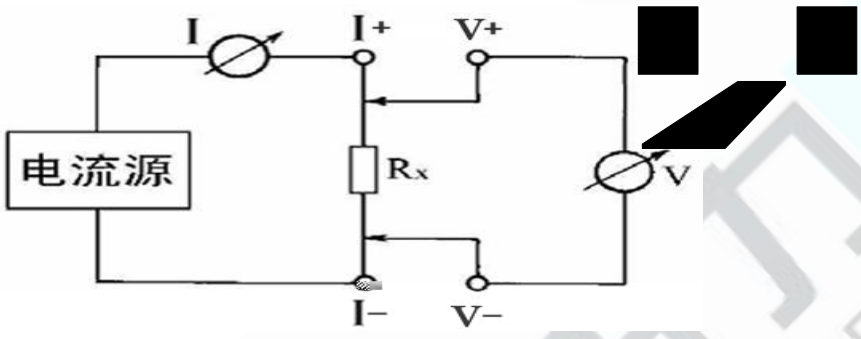

“ I+ I-

赫兹电力
HERTZ POWER

1

2

4

—

—

—

—

—

μ Ω μ Ω

SN1-- N’ '

4